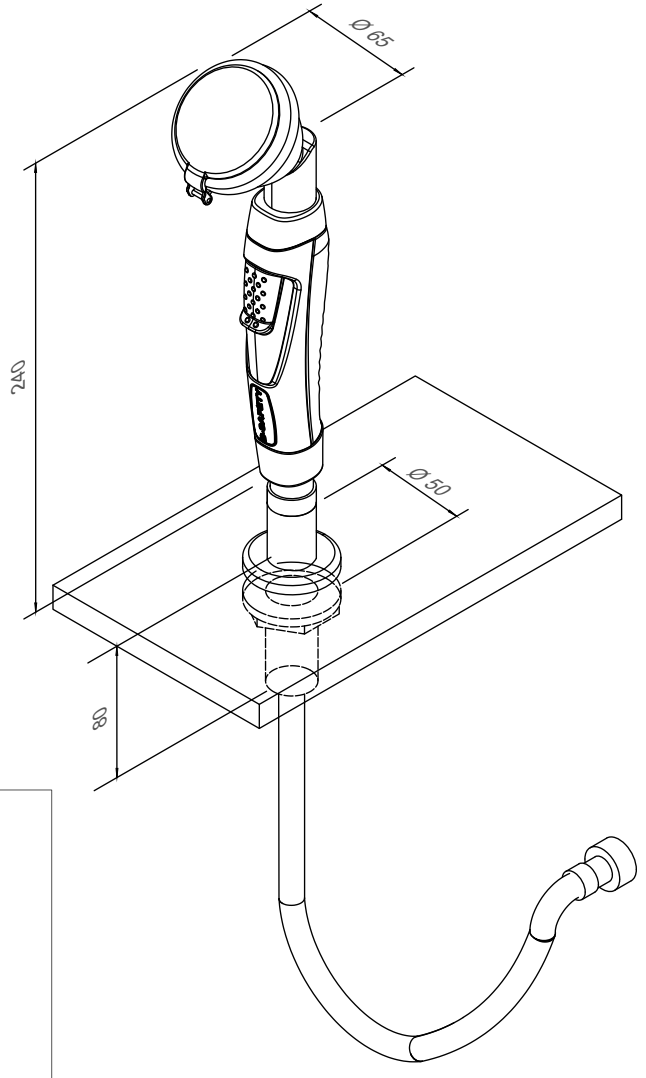

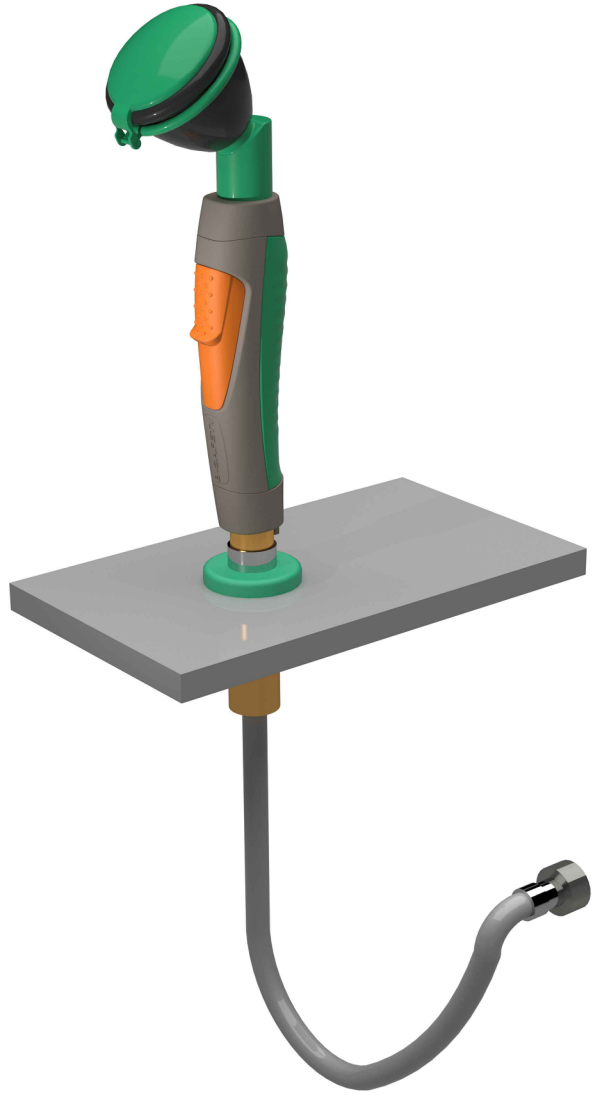

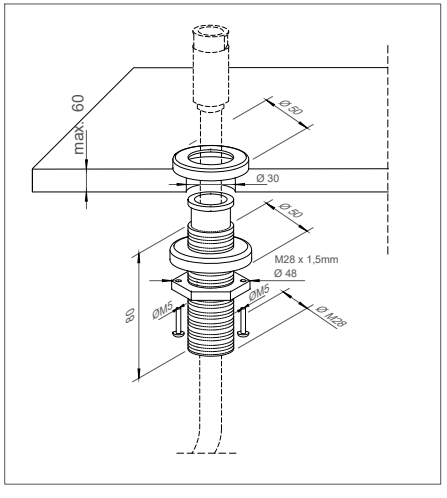

B-SAFETY® PROFESSIONAL SAFETY SOLUTIONS	Article: BR713020	REV / DATE: 05.10.2021
ClassicLine Handbrause,mit einem Brausekopf 45°, für Tischmontage	ClassicLine hand-held eye shower, with one spray head 45°, table mounted	